NAD SERVICE MANUAL

4130

AM/FM STEREO TUNER

CONTENTS

REAR PANEL CONNECTIONS ..... PAGE 3
SPECIFICATIONS, (NAD 4130 STEREO TUNER) ..... PAGE 4
ALIGNMENT METHOD ..... PAGE 5–7
ADJUSTMENT POINTS ..... PAGE 8
PCB LAYOUT AND WIRING DIAGRAM ..... PAGE 9, 10
SCHEMATIC DIAGRAM ..... PAGE 11, 12
TUNER, DISPLAY PCB COMPONENT LOCATION ..... PAGE 13, 14
4130 PARTS LIST ..... PAGE 15–19
EXPLODED VIEW ..... PAGE 20
PACKING DIAGRAM ..... PAGE 21

REAR PANEL

1. Antenna terminals.
2. AM Rod Antenna.
3. Audio Output.
4. AC line cord.

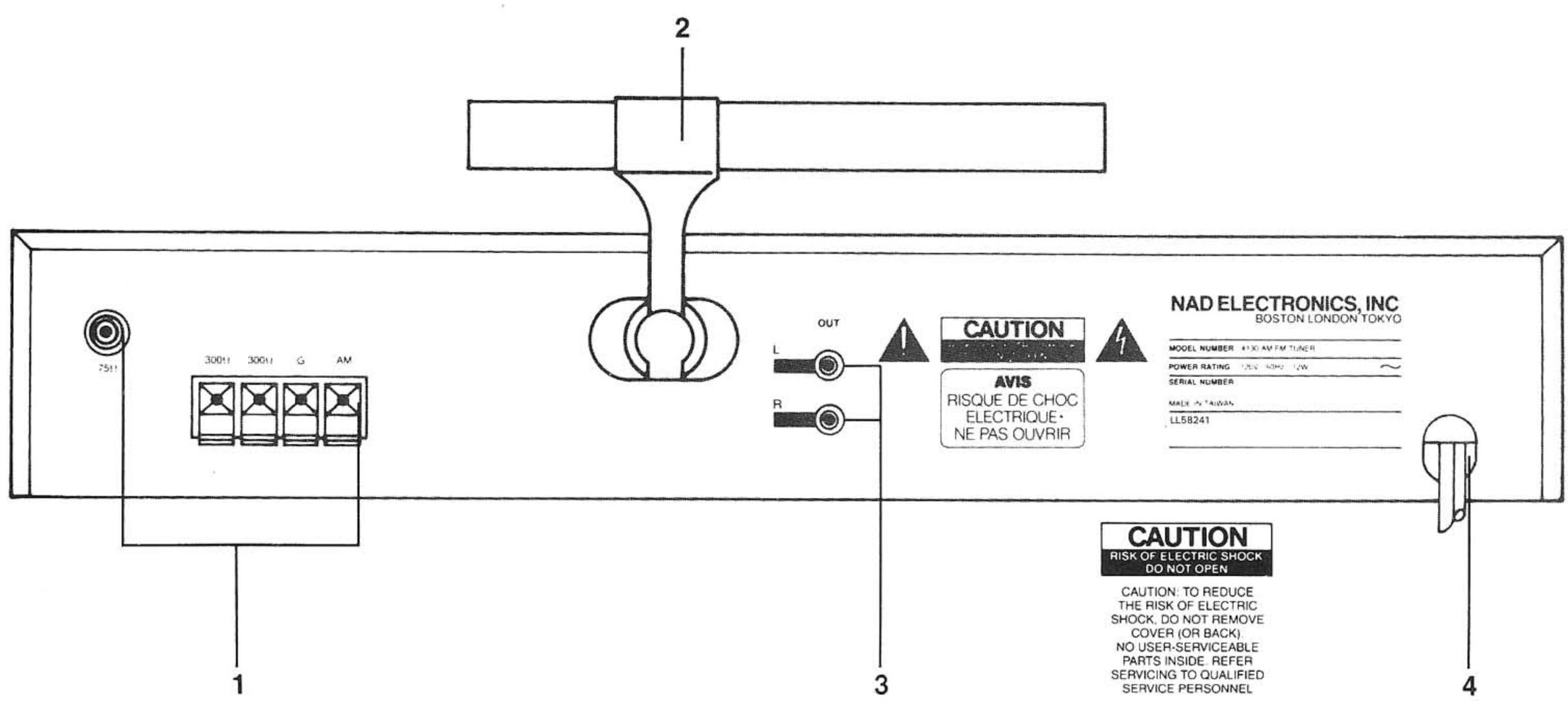

FRONT PANEL

1. Power.
2. Mono
3. FM NR Defeat.
4. Tuning Display.
5. FM Stereo Indicator.
6. Tuning Pre-sets.
7. Enter.
8. AM/FM.
9. Up/Down Tuning.
10. Search Mode (FM only).

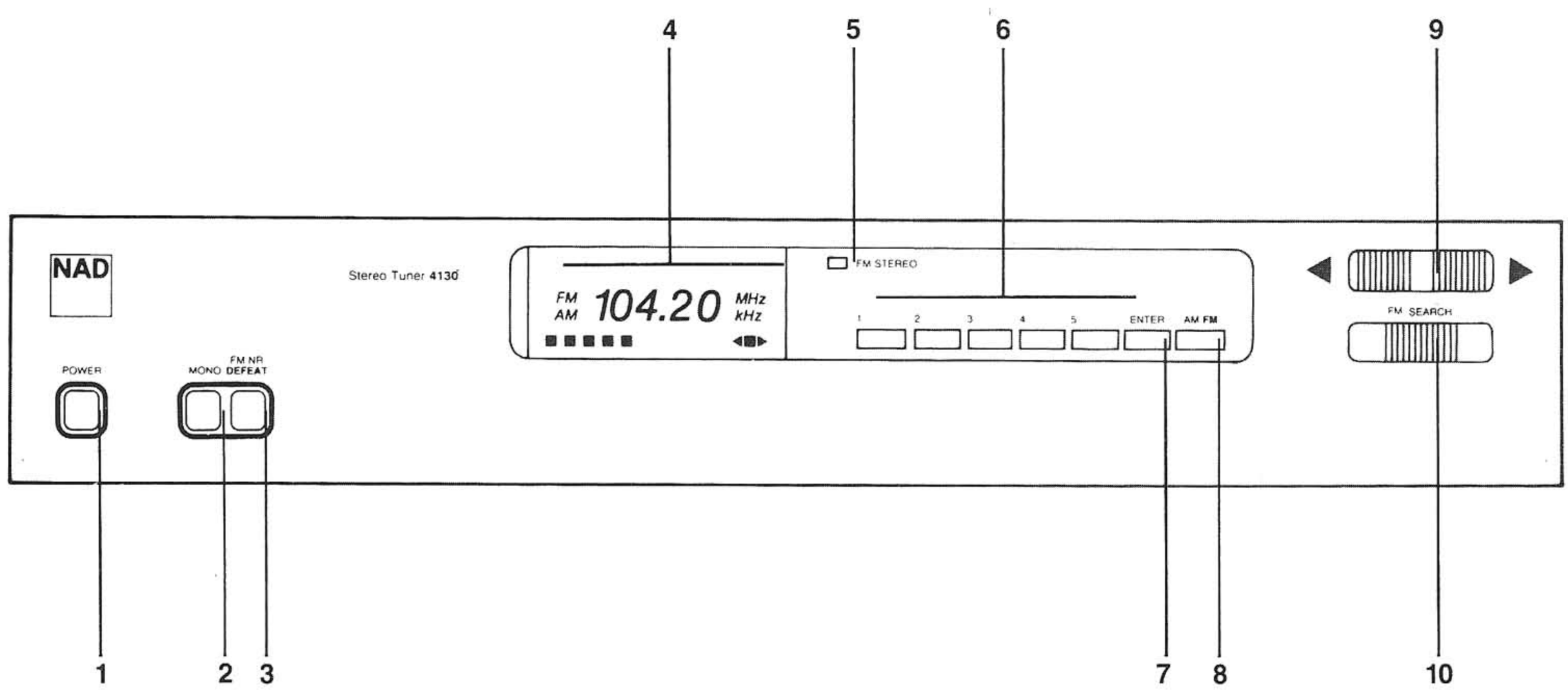

SPECIFICATIONS, NAD 4130 STEREO TUNER

Input Sensitivity		
	Mono, –30 dB THD +N	10.3 dBf (1.8μV/300Ω)
	Mono, 50 dB S/N	14.2 dBf (2.8μV)
	Stereo, 50 dB S/N	34.2 dBf (28μV)
	Stereo, 60 dB S/N	44.3 dBf (90μV)
Capture ratio at 25, 45 and 65 dBf		< 1.5 dB
AM rejection		> 62 dB
Selectivity	Altarnate channel	70 dB
	Adjecent channel	6dB
Image rejection		75 dB
R.F. Intermodulation		65 dB
I.F. rejection		75 dB
SCA rejection		70 dB
Subcarriel suppression 919+38 kHz)		60 dB
THD at 100% modulation		1 KHz 100Hz-6KHz
	Mono	0.09% 0.2%
	Stereo	0.09% 0.3%
Signal-to-noise ratio	Mono	82 dB
A-weighted, 65 dBf	Stereo	75 dB
		(typ. 80 dB at 75 dBf)
Frequency response, 30–15 kHz		± 0.5dB
Stereo seperation	1 kHz	50 dB
(Dyn Sep off)	30Hz–10kHz	40dB

AM Tuner Section

Usable sensitivity	300 μV/meter
Selectivity	35 dB
Image rejection	50 dB
I.F. rejection	50 dB

Physical Specifications

Dimensions (width x height x depth)	42 x 10.8 x 38 cm.
	16.5 x 4.25 x 15 in.
Net Weight	4.25 Kg/9 lb, 6 oz.
Shipping weight	4.7 Kg/10 lb, 5 oz.
Power consumption	50/60 Hz at 120.
	220 or 240 VAC
	15W

ALIGNMENT METHOD

FM ALIGNMENTS

NECESSARY INSTRUMENTATION

FM GENERATOR (less than 0.05% THD)
STEREO GENERATOR (less than 0.05% THD, more than 50 dB separation at 1 kHz.
AUDIO GENERATOR (not necessary if FM generator has built in sweep; i.e. SOUND TECHNOLOGY ST 1000A and ST 1020A)
2 AC VTVM's (or one with left/right channel switch)
THD ANALYZER (resolution better than 0.1%)
OSCILLOSCOPE (5mV or better sensitivity, X input capability)
FREQUENCY COUNTER
VOM or DMM (high impedance, must read in mV)
DIODE DETECTOR PROBE
COPPER / FERRITE INDUCTOR

IMPORTANT While all FM generator output levels hereafter are referred to the 300 ohm input, 75 ohm input can be used, but be aware of possible equipment groundloops and divide the RF output level by 2.
Before alignments commence set input selector to tuner and release tape, mono and dynsep defeat switches (out)

ALIGNMENT OF FRONTEND should only be necessary after repair to frontend or crystal oscillator circuits (pin 2 and 3 on IC7)

A TUNING VOLTAGE (OSCILLATOR)

It is essential to check tuning voltage before aligning the rest of the frontend.

1. Connect DMM between shield and pin 6 on frontend.
2. Tune to 108 MHz and adjust L 707 if voltage is incorrect.
   SPECIFICATION 20.5V ±0.5V
3. Tune to 87.5 MHz and read voltage, repeat step 2 and 3 if incorrect.
   SPECIFICATION 3V ± 0.5V

B. RF ADJUSTMENT (TRACKING)

1. Connect RF generator to antenna input and detectorprobe to pin 1, IC 2 (IF DETECTOR).
   with ground to detectorshield. Adjust sensitivity of oscilloscope to maximum (5mV or better) and modulate FM generator sweep ± 300 kHz or more WITH modulating (sweep) signal connected to X-imput of oscilloscope.
2. Set tuner to 90 MHz, enter into preset 1, and tune generator so that curve appears on oscilloscope. Turn down RF input level so that curve covers approximately 1/2 of oscilloscope display.
3. Check alignments of L 702 – L 704 – L705 by inserting copper/ferrite inductor close to them while watching curve on oscilloscope. Curve should decrease in height with either ferrite (same as increasing inductance, i.e. more core) or with copper (same as decreasing inductance, i.e. extend size of coil). If curve increases in size more than 10%, adjust only the coil which reacts incorrectly. Adjust coils by gently extend or contract the aircoil with a non-metallic and non-static tool (i.e. plastic knit-pin or a wooden stick). Be careful not to deform coil.
4. Set tuner to 105MHz, enter into preset 2, and tune generator so that curve appears on oscilloscope.
5. Check L 702 – L 704 – L 705 again with the ferrite/copper inductor. Curve should not increase more than 10% on any of the coils.
6. Repeat step 2 + 3 + 4 + 5 if curve height is outside of telerances, if necessary distribute the error between 90 and 105 MHz. Check tuning voltage again if tolerances not possible to achieve.

C. IF ADJUSTMENT

1. Set tuner to approximately 98 MHz (the tuner must be tuned to an unoccupied frequency) enter into preset 3, and tune FM generator to display a curve on the oscilloscope.
2. Adjust L 709 (IFT tuner frontend) to maximum and symmetrical curve on the display, using as little input signal as possible.

D. DETECTOR COARSE ADJUSTMENT (OPTIONAL, NEEDED ONLY IF DETECTOR WAS REPAIRED).

1. Reduce sweep modulation level to +/– 75 kHz and set input level to 300 μV.
2. Adjust FM generator frequency so that both legs of the inverted U-shaped curve are equally high on the display. The curve should be almost perfectly symmetrical.
3. Disconnect detectorprobe from tuner and oscilloscope. Connect either of the tape rec. outputs to the oscilloscope.
4. Adjust IFT 1 primary (closest to the rear of unit) to maximum curveheight and IFT 1 secondary (closest to the front of unit) to minimum curveheight and straightest possible line. Go back and forth between primary and secondary till both are peaked.

NOTE: Both the cores should be within 1.5 mm from the top of the form.

E. DETECTOR ALIGNMENTS (FINAL)

1. Disconnect detectorprobe and connect tape rec. outputs to VTVM's, oscilloscope and distortion analyzer.
2. Switch stereo generator to 1 kHz 100% (+/– 75 kHz) mono modulation and oscilloscope to normal internal sweep 0.2 mS and 0.5 V/cm sensitivity.
3. Detector reference frequency
   Reduce FM generator output level while monitoring THD from left channel. When THD increases to 3%, fine tune the FM generator frequency to minimum THD. Reduce FM generator output level and fine tune till no reduction in the 3% THD can be achieved by fine tuning. Use this frequency for all the following detector, MPX and DYN SEP adjustments.

NOTE: The typical input level for this 3% THD should be 1.6 μV to 2.3 μV. This is done only to "lineup" the frequency from the generator to the tuner's frequency.
If IHF usable sensitivity (–30 dB THD+N = 3.16% THD+ N) is to be verified, a proper IHF bandpassfilter must be used.

4. Connect DMM across TP 2 (negative) and TP 1 (positive). Set FM generator output level to 1000 μV.
5. Adjust IFT 1 primary (closest to the rear of unit) for 0 V on DMM
   TOLERANCE +/– 50 mV
6. Adjust IFT 1 secondary (closest to the front of unit) for lowest THD
   SPECIFICATION less than 0.1%.
7. Repeat steps 3 – 5 and 6 till no further improvements. Record the DMM's final reading for use later in the adjustment.

F. AUTOSEARCH LEVEL

1. Connect DMM between IC 2 pin 12 and ground.
2. Increase FM generator level upwards from 0 and adjust VR 1 so that DMM reading goes from 0 V to approximately 4.8 V at 10 μV.
   TOLERANCE +/– 2 μV

G. STEREO DECODER, MPX FILTERS.

1. VCO
   Connect a frequency counter between IC 6 pin 11 and ground.
2. Set FM generator to 1000 μV output and no modulation.
3. Adjust VR 3 for a 19000 Hz reading on the counter.
   TOLERANCE +/– 100 Hz
4. Disconnect frequency counter and press FM NR defeat switch (in).
5. Stereo switch threshold.
   Modulate FM generator 1 kHz 45% left only plus 19 kHz pilot 8 – 10 %.
6. Increase FM generator level upwards from 0 and adjust VR 2 so that stereo light turns on and audio outputs as watched on VTVM and oscilloscope, switches to one channel only at 10 μV input level.
   TOLERANCE +5 μV

NOTE: When turning input level down the unit will switch into mono at a lower level, typically 5 – 7 μV.

7. Stereo separation
Set FM generator output to 1000 μV, modulate in mono only.

8. Adjust VR 4 for identical outputs in the two channels.
TOLERANCE +/– 20 mV.

9. Modulate FM generator left channel only and adjust VR 5 for minimum on right channel VTVM.

10. Modulate FM generator right channel only and adjust VR 5 for minimum on left channel VTVM.

11. If the minimum in step 9 and 10 are different, adjust VR 5 so that the readings are the same in both channels.
SPECIFICATION better than 40 dB separation.

12. MPX filter
Turn off audiomodulation, leaving pilot tone only. Disable IHF filter or external 19 kHz filter if used.

13. Adjust LPF 1 left channel and LPF 2 right channel for minimum output.
SPECIFICATION more than 60 dB suppression.

14. Release the FM NR DEFEAT switch (out).

H DYN SEP ADJUSTMENTS.

1. Turn VR 6 fully clockwise.

2 FM NR separation effect.
Observe output from left channel with FM generator output level 1000 μV and mdoulated 1 kHz left channel only.
Reduce audiomodulation only from stereo generator so that left channel output is reduced by 6 dB (50% stereo modulation).
The 19 kHz pilot signal MUST REMAIN modulated 8 – 10%.

3. Set FM generator output to 150μV and adjust VR 6 for –30 dB separation left to right channel. (or right to left).
TOLERANCE +/– 2 dB

SYNTHESIZER FREQUENCY.

1. Tune to a known accurate frequency source, i.e. broadcasting station or synthesized / digital display FM generator, preferably in the midband (95 – 100 MHz).

2. Connect DMM acros TP 2 (negative) and TP 1 (positive).

3. Adjust VC 2 so that DMM reads the same as recorded in E – 7.
TOLERANCE +/– 10 mV.

AM ALIGNMENTS

Unless repairs have been done to Oscillator Section, do not not adjust AM OSC coil or Trimming Capacitor.
If OSC Adjustment is needed, connect high impedance voltmeter (preferably DMM) between R35 and ground.

A. OSC ADJUSTMENT

1. Tune unit to show 1610KHz or 1602KHz on display and adjust VC3 to read 7.5V on DMM.

2. Tune unit to show 520KHz or 522KHz on display and adjust L3 to reads 1V ±0.5V on DMM.

3. Repeat step 1 and 2 until no further improvement.

B IF ADJUSTMENT

1. For IF adjustment and Tracking adjustment connect VTVM to loudspeaker output (or tape output), only one channel connection needed, and connect signal generator to antenna terminals. Adjust generator for 30% modulation and approx. 100μV input.
Tune both generator and receiver to approx. 1000KHz, and adjust generator frequency for maximum reading on VTVM. Then adjust IFT2, and IFT3 for maximum reading on meter.

C. TRACKING ADJUSTMENT

1. Tune unit and generator to show approx. 600KHz and adjust L2 to maximum reading on VTVM.

2. Tune unit and generator to show approx. 1400KHz and adjust VC1 (Trimming Capacitor) for maximum reading on VTVM.

3. Repeat step 1 and 2 until no further improvement.

ADJUSTMENT POINTS

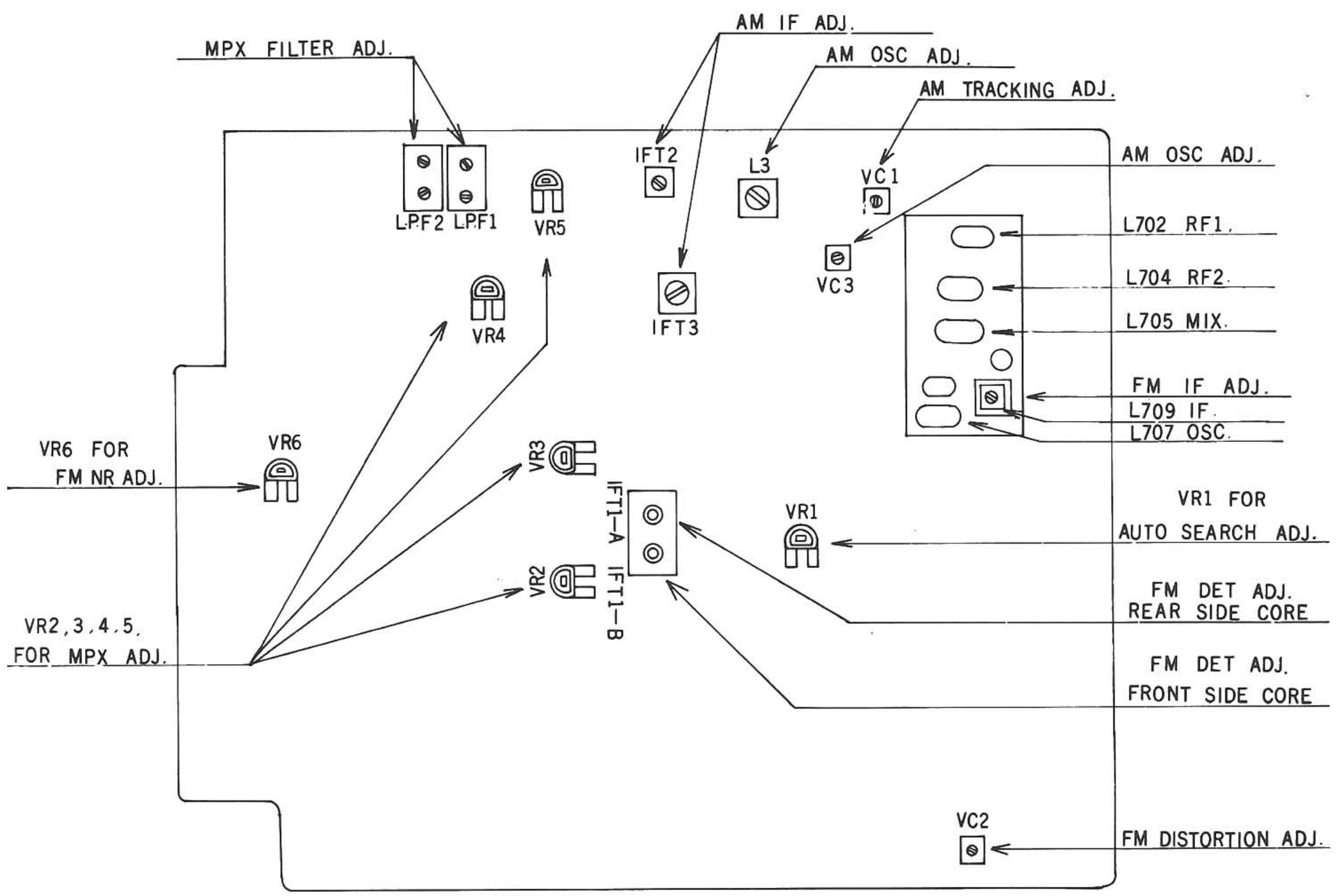

PCB LAYOUT AND WIRING DIAGRAM

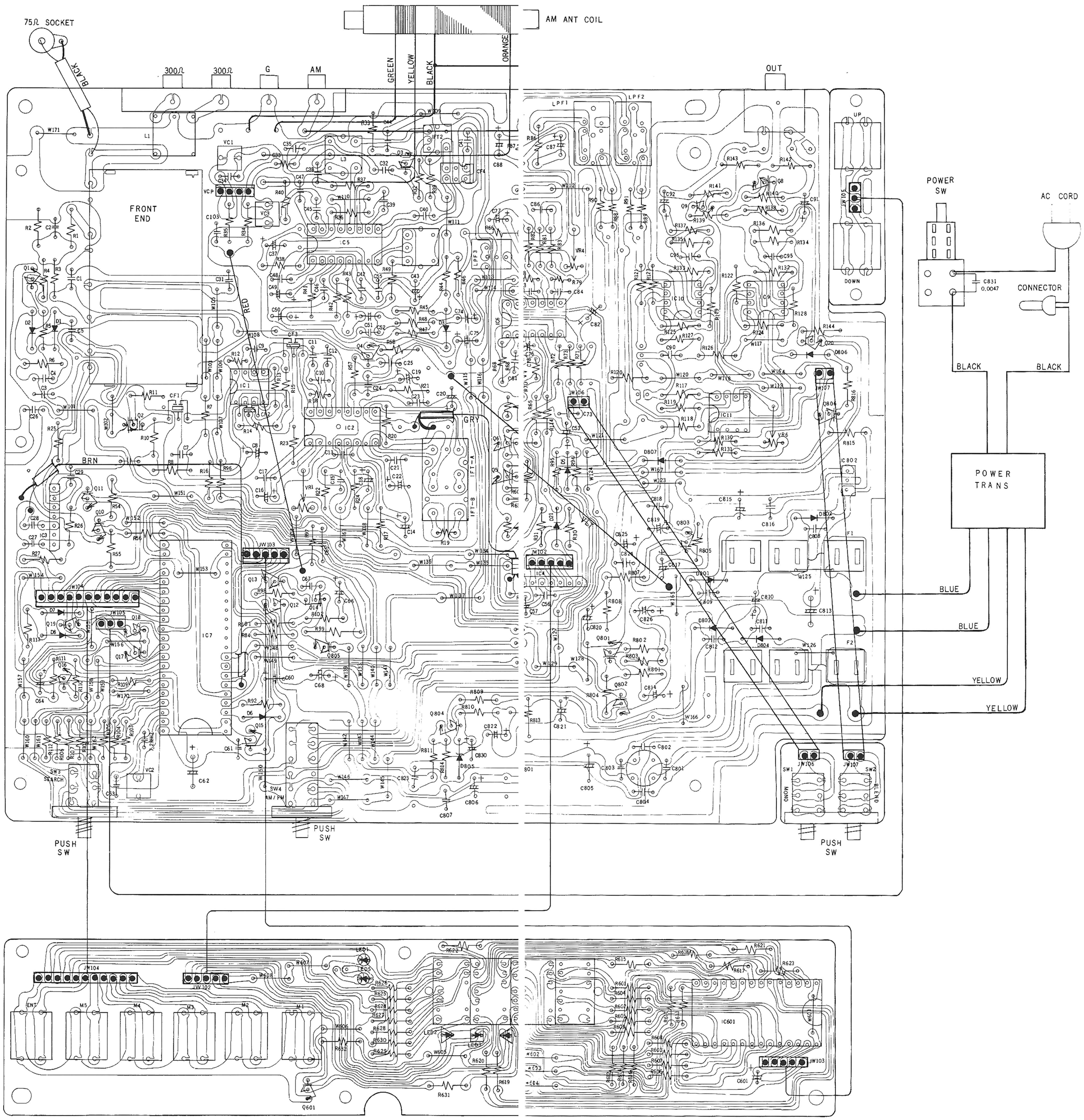

SCHEMATIC DIAGRAM

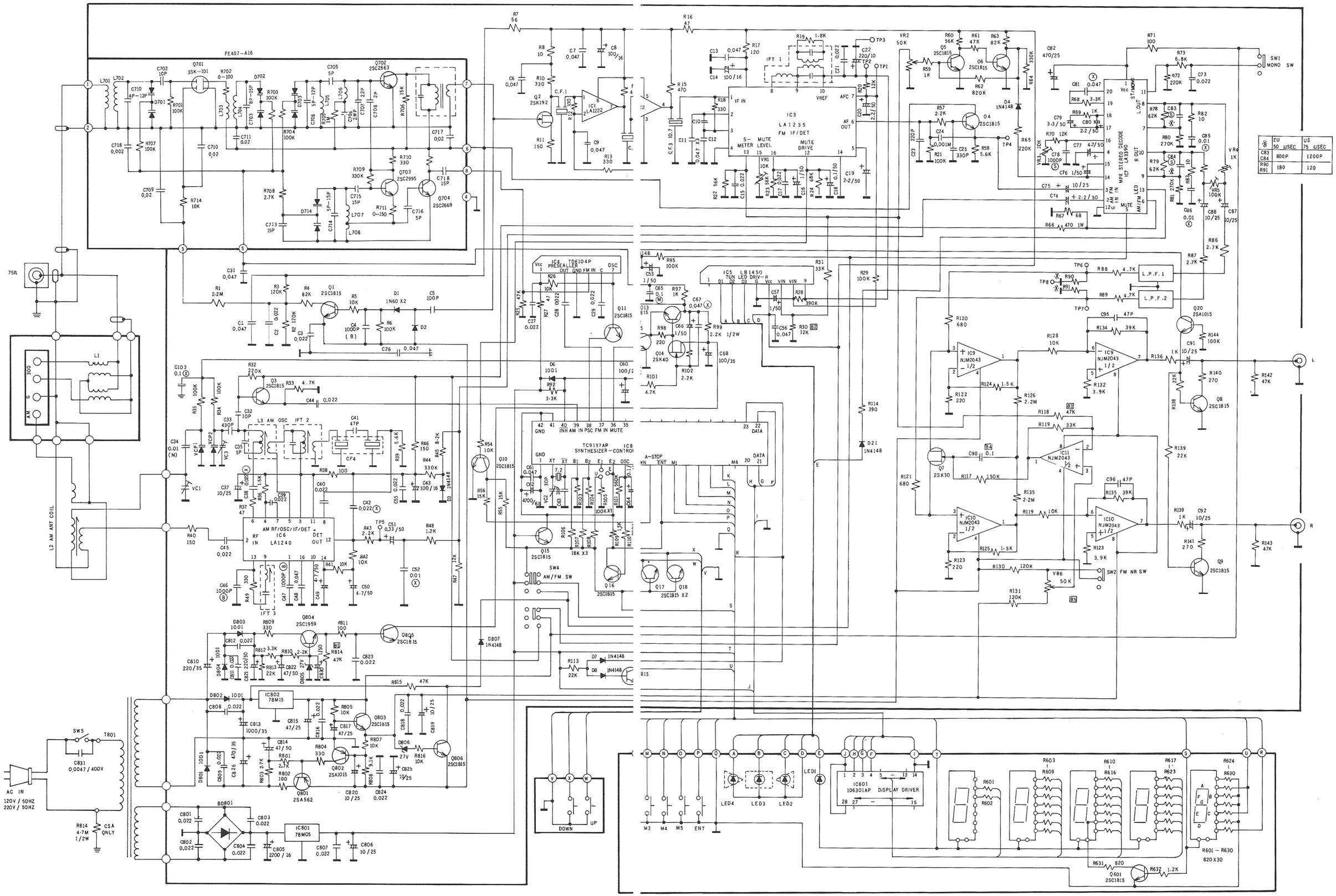

	EU 50 μSEC	US 75 μSEC
C83 C84	800P	1200P
R90 R91	180	120

TUNER DISPLAY PCB COMPONENT LOCATION

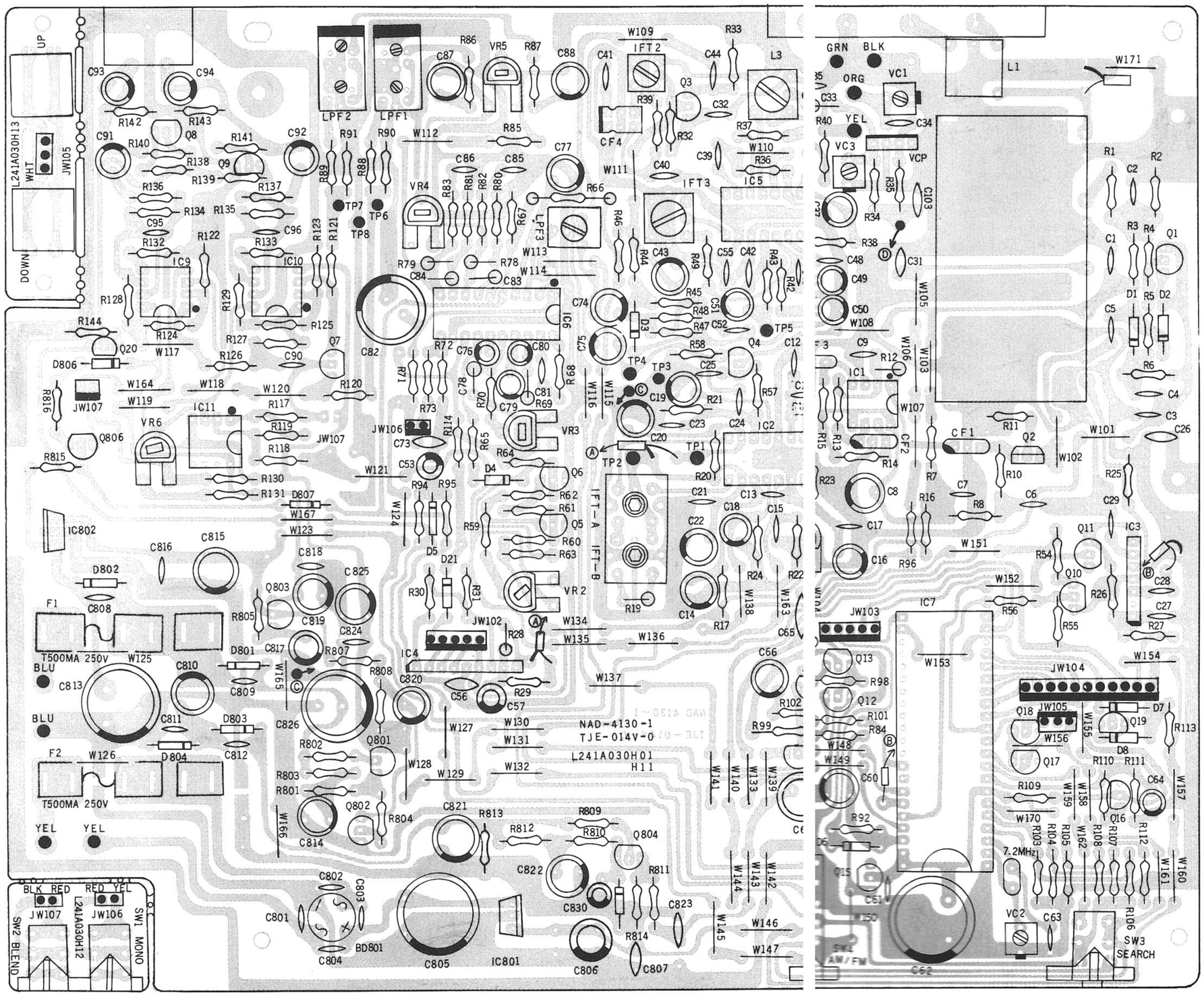

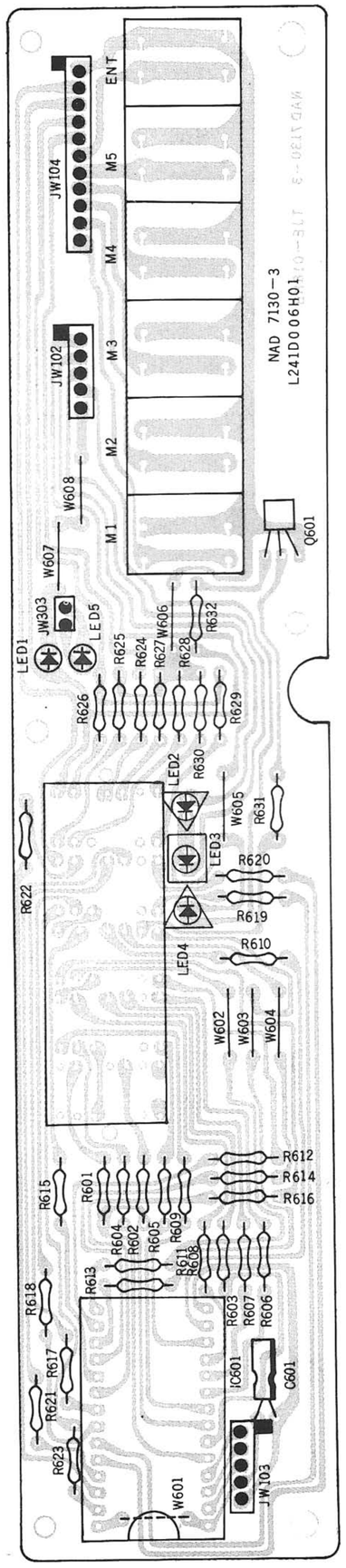

NAD 4130 PARTS LIST

SYMBOL NO.	PART NO.	DESCRIPTION				REF
R1	L103Y214H57	Res, Carb.	2.2M	+5%	1/4W	
R2	L103Y214H44	"	120K	"	"	
R3	L103Y214H44	"	"	"	"	
R4	L103Y022H42	"	82K	"	"	
R5	L103Y214H31	"	10K	"	"	
R6	L103Y214H43	"	100K	"	"	
R7	L103Y022H69	"	56	"	"	
R8	L103Y214H01	"	10	"	"	
R10	L103Y214H13	"	330	"	"	
R11	L103Y214H09	"	150	"	"	
R12	U103S017H13	"	330	"	"	
R13	L103Y214H13	"	"	"	"	
R14	L103Y214H15	"	470	"	"	
R15	"	"	"	"	"	
R16	L103Y214H05	"	"	"	"	
R17	L103Y214H08	"	120	"	"	
R18	U103S017H13	"	330	"	"	
R19	L103Y214H22	"	1.8K	"	"	
R20	L103Y214H32	"	12K	"	"	
R21	L103Y214H43	"	100K	"	"	
R22	L103Y214H40	"	56K	"	"	
R23	L103Y214H40	"	"	"	"	
R24	L103Y214H41	"	68K	"	"	
R25	L103Y214H39	"	47K	"	"	
R26	L103Y214H31	"	10K	"	"	
R27	L103Y214H05	"	47	"	"	
R28	L103Y214H50	"	390K	"	"	
R29	L103Y214H43	"	100K	"	"	
R30	L103Y214H35	"	22K	"	"	
R31	L103Y214H37	"	33K	"	"	
R32	L103Y214H47	"	220K	"	"	
R33	L103Y214H27	"	4.7K	"	"	
R34	L103Y214H43	"	100K	"	"	
R35	L103Y214H43	"	"	"	"	
R36	L103Y214H21	"	1.5K	"	"	
R37	L103Y214H05	"	47	"	"	
R38	L103Y214H07	"	100	"	"	
R39	L103Y214H28	"	5.6K	"	"	
R40	L103Y214H09	"	150	"	"	
R41	L103Y214H31	"	10K	±5%	"	
R42	L103Y214H31	"	"	"	"	
R43	L103Y214H23	"	2.2K	"	"	
R44	L103Y214H49	"	330K	"	"	
R45	L103Y022H30	"	8.2K	"	"	
R46	L103Y214H09	"	150	"	"	
R47	L103Y214H32	"	12K	"	"	
R48	L103Y022H20	"	1.2K	"	"	
R49	L103Y214H13	"	330	"	"	
R54	L103Y214H31	"	10K	"	"	
R55	L103Y214H33	"	15K	"	"	
R56	L103Y214H33	"	"	"	"	
R57	L103Y214H23	"	2.2K	"	"	
R58	L103Y214H28	"	5.6K	"	"	
R59	L103Y214H19	"	1K	"	"	
R60	L103Y214H40	"	56K	"	"	
R61	L103Y214H39	"	47K	"	"	
R62	L103Y214H54	"	820K	"	"	
R63	U103S014H42	"	82K	"	"	
R64	L103Y214H49	"	330K	"	"	
R65	L103Y214H47	"	220K	"	"	
R66	U105S005H21	Res, Metal	470	"	1W	
R67	L103Y214H06	Res, Carb.	68	"	1/4W	
R68	L103Y214H25	"	3.5K	"	"	
R69	U103S107H19	Res, Metal	1K	"	"	
R70	L103Y214H32	Res, Carb.	12K	"	"	

SYMBOL NO.	PART NO.	DESCRIPTION				REF
R71	L103Y214H07	Res, Carb.	100	±5%	1/4W	
R72	L103Y214H29	"	220K	"	"	
R73	L103Y022H29	"	6.8K	"	"	
R78	U103S037H40	"	62K	"	"	
R79	U103S037H40	"	"	"	"	
R80	L103Y214H48	"	270K	"	"	
R81	L103Y214H48	"	"	"	"	
R82	L103Y214H01	"	10	"	"	
R83	"	"	"	"	"	
R84	L103Y214H33	"	15K	"	"	
R85	L103Y214H16	"	560	"	"	
R86	L103Y214H24	"	2.7K	"	"	
R87	L103Y214H24	"	"	"	"	
R88	L103Y214H27	"	4.7K	"	"	
R89	"	"	"	"	"	
R90	L103Y022H08	"	120	"	"	A1
R90	"	"	"	"	"	A
R90	L103Y022H10	"	"	"	"	B
R90	"	"	"	"	"	C1
R90	"	"	"	"	"	C
R90	"	"	"	"	"	B1
R90	L103Y022H08	"	"	"	"	C3
R90	L103Y022H10	"	"	"	"	C2
R91	L103Y022H08	"	"	"	"	A1
R91	"	"	"	"	"	A
R91	L103Y022H10	"	"	"	"	B
R91	"	"	"	"	"	C1
R91	"	"	"	"	"	C
R91	"	"	"	"	"	B1
R91	L103Y022H08	"	"	"	"	C3
R91	L103Y022H10	"	"	"	"	C2
R92	L103Y214H25	"	3.3K	"	"	
R93	L103Y214H31	"	10K	"	"	
R94	L103Y214H45	"	150K	"	"	
R95	L103Y214H43	"	100K	"	"	
R96	L103Y214H27	"	4.7K	"	"	
R97	L103Y214H19	"	1K	"	"	
R98	L103Y214H11	"	220	"	"	
R99	U103S024H23'	"	2.2K	"	1/2W	
R100	L103Y214H33	"	15K	"	1/4W	
R101	L103Y214H27	"	4.7K	"	"	
R102	L103Y214H23	"	2.2K	"	"	
R103	L103Y214H43	"	100K	"	"	
R104	"	"	"	"	"	
R105	L103Y022H43	"	100K	"	"	A1
R105	L103Y022H43	"	"	"	"	A
R105	L103Y022H43	"	"	"	"	C3
R106	L103Y214H34	"	18K	"	"	
R107	"	"	"	"	"	
R108	L103Y022H34	"	18K	"	"	A1
R108	"	"	"	"	"	A
R108	"	"	"	"	"	C3
R109	L103Y214H21	"	1.5K	"	"	
R110	L103Y214H47	"	220K	"	"	
R111	L103Y214H52	"	560K	"	"	
R112	L103Y214H35	"	22K	"	"	
R113	L103Y214H35	"	"	"	"	
R114	L103Y022H14	"	390	"	"	
R117	L103Y214H45	"	150K	"	"	
R118	L103Y214H39	"	47K	"	"	
R119	L103Y214H37	"	33K	"	"	
R120	L103Y214H17	"	680	"	"	
R121	"	"	"	"	"	
R122	L103Y214H11	"	220	"	"	
R123	"	"	"	"	"	

SYMBOL NO.	PART NO.	DESCRIPTION				REF
R124	L103Y214H21	Res, Carb.	1.5K	±5%	1/4W	
R125	"	"	"	"	"	
R126	L103Y214H57	"	2.2M	"	"	
R127	"	"	"	"	"	
R128	L103Y214H31	"	10K	"	"	
R129	"	"	"	"	"	
R130	L103Y214H44	"	120K	"	"	
R131	"	"	"	"	"	
R132	L103Y214H26	"	3.9K	"	"	
R133	"	"	"	"	"	
R134	L103Y214H38	"	39K	"	"	
R135	"	"	"	"	"	
R136	L103Y214H19	"	1K	"	"	
R137	"	"	"	"	"	
R138	L103Y214H35	"	22K	'	"	
R139	"	"	"	"	"	
R140	L103Y214H12	"	270	"	"	
R141	"	"	"	"	"	
R142	L103Y214H39	"	47K	"	"	
R143	"	"	"	"	"	
R144	L103Y022H43	"	100K	"	"	
R601-R631	L103Y214H18	"	820	"	"	
R632	L103Y214H20	"	1.2K	"	"	
R801	L103Y214H24	"	2.7K	"	"	
R802	L103Y022H07	"	100	"	"	
R803	L103Y214H24	"	1.7K	"	"	
R804	L103Y214H13	"	330	"	"	
R805	L103Y214H31	"	10K	"	"	
R806	L103Y214H30	"	8.2K	"	"	
R807	L103Y214H31	"	10K	"	"	
R808	L103Y022H72	"	9.1K	"	"	
R809	L103Y214H13	"	330	"	"	
R810	L103Y214H23	"	2.2K	"	"	
R311	L103Y214H07	"	100	"	"	
R812	L103Y214H25	"	3.3K	"	"	
R813	L103Y214H35	"	22K	"	"	
R814	L103Y214H39	"	47K	"	"	
R815	L103Y214H39	"	"	"	"	
R816	L103Y214H31	"	10K	"	"	
R820	L103Y214H37	"	4.7M	"	1/2W	
C1	L140Y306H45	Cap, Cer.	0.047μF	+80–20%	50WV	
C2	L140Y306H39	"	0.022μF	"	"	
C3	L140Y201H17	"	0.022μF	"	25WV	
C4	L140Y306H12	"	1000pF	±10%	50WV	
C5	L140Y203H35	"	100PF	±5%	50WV	
C6	L140Y306H45	"	0.047μF	+80–20%	50WV	
C7	"	"	"	"	"	
C8	L182Y322H26	Cap, El.	100μF	+50–10%	16V	
C9	L140Y306H45	Cap, Cer.	0.047μF	+80–20%	50WV	
C10	"	"	"	"	"	
C11	"	"	"	"	"	
C12	"	" "	"	"	"	
C13	"	"	"	"	"	
C14	U182S022H26	Cap, El.	100μF	+50–10%	16V	
C15	L140Y306H39	Cap, Cer.	0.022μF	+80–20%	50WV	
C16	L182Y322H60	Cap, El	1μF	+75–10%	50V	
C17	L140Y306H39	Cap, Cer.	0.022μF	+80–20%	50WV	
C18	U182S022H55	Cap, El.	0.1μF	+75–10%	50V	
C19	U182S022H61	"	2.2μF	+75–10%	50V	
C20	L182Y322H61	"	2.2μF	+75–10%	50V	
C21	L140Y306H3P	Cap, Cer.	0.022μF	+80–20%	50WV	
C22	L182Y322H15	Cap, El.	220μF	+50–10%	10V	
C23	L140Y306H05	Cap, Cer.	220P	±5%	50WV	
C24	L172Y306H01	Cap, Poly.	0.001μF	±10%	50WV	

SYMBOL NO.	PART NO.	DESCRIPTION				REF
C25	L140Y306H07	Cap, Poly.	330PF	±10%	50WV	
C26	L140Y306H45	"	0.047μF	+80–20%	50WV	
C27	L140Y306H39	Cap. Cer.	0.022μF	+80–20%	50WV	
C28	"	"	"	"	"	
C29	"	"	"	"	"	
C31	L140Y306H45	"	0.047μF	+80–20%	50WV	
C32	L140Y203H11	"	10PF	±0.5pF	50WV	
C33	U173S006H16	Cap, Stypol	430PF	±5%	50WV	
C34	L172Y306H13	Cap, Poly	0.01μF	"	"	
C35	L140Y203H06	Cap, Cer.	5pF	±0.5pF	50WV	
C37	L182Y322H34	Cap, El	10μF	+50–10%	25V	
C38	L140Y203H17	Cap, Cer.	0.022μF	±10%	25WV	
C39	L140Y306H39	"	0.022μF	+80–20%	50WV	
C40	L140Y306H39	"	"	"	"	
C41	L140Y203H27	Cap, Cer.	47pF	±5%	50WV	
C42	L140Y201H17	"	0.022μF	±10%	25WV	
C43	U182S022H26	Cap, El.	100μF	+50–10%	16V	
C44	L140Y306H39	Cap, Cer.	0.022μF	+80–20%	50WV	
C45	"	"	"	"	"	
C46	L140Y306H12	"	1000pF	±10%	50WV	
C47	"	"	"	"	"	
C48	L140Y306H45	"	0.047μF	+80–20%	50WV	
C49	U182S322H63	Cap, El.	4.7μF	+75–10%	50V	
C50	L182Y322H63	"	"	"	"	
C51	U182S022H57	Cap, El.	0.33μF	+75–10%	50V	
C52	L140Y201H13	Cap, Cer.	0.01μF	±10%	25WV	
C53	U182S022H60	Cap, El.	1μF	+75–10%	50V	
C54						
C55	U140S005H29	Cap, Cer.	0.022μF	±5%	50WV	
C56	L140Y306H45	Cap, Cer.	0.047μF	+80–20%	50WV	
C57	U182S022H60	Cap, El.	1μF	+75–10%	50V	
C60	L182Y322H38	Cap, El	100μF	+50–10%	25V	
C61	L140Y306H45	"	0.047μF	+80–20%	50WV	
C62	L180Y037H01	"	4700μF	+50–10%	6.3V	
C63	L140Y203H17	cap, Cer.	18P	±5%	50WV	
C64	U182S022H55	Cap. El	0.1μF	+75–10%	50V	
C65	U172S002H13	Cap, Poly	0.1μF	+50–10%	50WV	
C66	L182Y322H60	Cap. El.	1μF	+75–10%	50V	
C67	L140Y201H21	Cap, Cer.	0.047μF	±10%	25WV	
C68	U182S022H49	Cap, El.	k100μF	+50–10%	35V	
C73	L140Y306H39	Cap, Cer.	0.022μF	+80–20%	50WV	
C74	L182Y322H61	Cap, El.	2.2μF	+75–10%	50V	
C75	L182Y322H34	"	10μF	+50–10%	25V	
C76	U182S022H61	"	1μF	+75–10%	50V	
C77	L182Y322H63	"	4.7μF	+75–10%	50V	
C78	U173S004H07	Cap, Styrol	0.001μF	±5%	50WV	
C79	U182S022H62	Cap, El.	3.3μF	+75–10%	50V	
C80	U182S022H61	"	2.2μF	+75–10%	50V	
C81	L140Y201H21	Cap, Cer.	0.047μF	±10%	25WV	
C82	U182S022H41	Cap, El.	470μF	+50–10%	25V	
C83	U173S004H18	Cap, Styrol	1200pF	±5%	50WV	A1
C84	"	"	"	"	"	A
C83	L173D001H03	"	800PF	"	"	B
C83	"	"	"	"	"	C1
C83	U173S004H18	"	1200pF	"	"	C
C83	"	"	"	"	"	B1
C83	U173S004H18	"	1200pF	"	"	C3
C83	L173D001H03	"	800pF	"	"	C2
C84	U173S004H18	"	1200pF	"	"	A1
C84	"	"	"	"	"	A
C84	L173D001H03	"	800pF	"	"	B
C84	"	"	"	"	"	C1
C84	"	"	"	"	"	C
C84	"	"	"	"	"	B1
C84	U173S004H18	"	1200pF	"	"	C3

SYMBOL NO.	PART NO.	DESCRIPTION				REF
C84	U173S004H18	Cap, Styrol	1200pF	±5%	50WV	A
C84	L173D001H03	"	800pF	"	"	B
C84	"	"	"	"	"	C1
C84	"	"	"	"	"	C
C84	"	"	"	"	"	B1
C84	U173S004H18	"	1200pF	"	"	C3
C84	L173D001H03	"	800pF	"	"	C2
C85	L140Y201H13	Cap, Cer.	0.01μF	±10%	25WV	
C86	"	"	"	"	"	
C87	L182Y322H34	Cap, El.	10μF	+50−10%	25V	
C88	"	"	"	"	"	
C90	L172Y306H25	Cap, Poly	0.1μF	±5%	50WV	
C91	L182Y322H34	Cap, El.	10μF	+50−10%	25V	
C92	"	"	"	"	"	
C93	"	"	"	"	"	
C94	L182Y322H34	"	"	"	"	
C95	L140Y203H27	Cap, Cer.	47pF	±5%	50WV	
C96	"	"	47pF	"	"	
C101	U150S008H14	Cap, Cer.	0.0022μF	±10%	50WV	C1
C102	"	"	"	"	"	C1
C103	U140S020H51	Cap. Cer.	0.1μF	+80−20%	25V	
C601	U182S022H34	Cap, El.	10μF	+50−10%	"	
C801	L140Y306H39	Cap, Cer.	0.022μF	+80−20%	50WV	
C802	"	"	"	"	"	
C803	"	"	"	"	"	
C804	"	"	"	"	"	
C805	U182S022H31	Cap, El.	2200μF	+50−10%	16V	
C806	L182Y322H34	"	10μF	+50−10%	25V	
C807	U140S005H29	Cap, Cer.	0.022μF	+80−20%	50WV	
C808	L140Y306H39	"	"	"	"	
C809	"	"	"	"	"	
C810	U182S022H50	Cap, El	220μF	+50−10%	35V	
C811	L140Y306H39	Cap, Cer	0.022μF	+80−20%	50WV	
C812	"	"	"	"	"	
C813	U182S022H53	Cap, El.	1000μF	+50−10%	35V	
C814	L182Y322H67	"	47μF	+50−10%	50V	
C815	L182Y322H37	"	47μF	+50−10%	25V	
C816	L140Y306H39	Cap, Cer.	0.022μF	+80−20%	50WV	
C817	L182Y322H37	Cap, El.	47μF	+50−10%	25V	
C818	L140Y306H39	Cap, Cer.	0.022μF	+80−20%	50WV	
C819	L182Y322H34	Cap, El.	10μF	+50−10%	25V	
C820	L182Y322H34	"	"	"	"	
C821	U182S022H69	"	220μF	"	50V	
C822	U182Y322H67	"	47μF	"	"	
C823	L140Y306H39	Cap, Cer.	0.022μF	+80−20%	50WV	
C824	U140S005H29	"	"	±5%	"	
C825	L182Y322H34	Cap, El.	10μF	+50−10%	25V	
C826	U182S022H52	Cap, El.	470μF	+50−10%	35V	
C831	U140Y007H07	Cap, Cer.	0.0047μF	±20%	400V	
Q1	U260S061H03	TR, 2SC1815 (GR)				
Q2	L260D026H01	TR, 2SK192 (Y)				
Q3	U260S061H03	TR, 2SC1815 (GR)				
Q4	"	" "				
Q5	"	" "				
Q6	"	" "				
Q7	L260D025H03	" 2SK30ATM (Y)				
Q8	U260S061H03	" 2SC1815 (GR)				
Q9	"	" "				
Q10	"	" "				
Q11	"	" "				
Q12	"	" "				
Q13	"	" "				
Q14	L260D032H02	" 2SK40(C)				
Q15	U260S061H03	" 2SC1815 (GR)				

SYMBOL NO.	PART NO.	DESCRIPTION	REF
Q16	U260S061H03	TR, 2SC1815 (GR)	
Q17	"	" "	
Q18	"	" "	
Q19	"	" "	
Q20	L260D020H03	" 2SA1015 (GR)	
Q601	U260S061H03	" 2SC1815 (GR)	
Q801	L260D019H02	" 2SA562 (Y)	
Q802	L260D020H03	" 2SA1015 (GR)	
Q803	L260S061H03	" 2SA1815 (GR)	
Q804	L260D022H02	" 2SC1959 (Y)	
Q805	U260S061H03	" 2SC1815 (GR)	
Q806	"	" "	
D1	U264D006H11	DIODE IN60	
D2	"	" "	
D3	U264D037H01	" 1N4148	
D4	"	" "	
D5	"	" "	
D6	U264D009H11	" 10D1	
D7	U264D037H01	" 1N4148	
D8	"	" "	
D21	"	" "	
D801	U264D009H11	DIODE 10D1	
D802	"	" "	
D803	"	" "	
D804	U264D009H11	DIODE 10D1	
D805	L264C003H72	DIODE ZENER UZ−27B (M)	
D806	"	" "	
D807	U264D037H01	DIODE 1N4148	
BD801	L264D017H01	DIODE PB153M	
LED1	L268Y027H01	LED SE-9431D	
LED2	L268Y025H01	LED SE-7231	
LED3	L268Y024H01	LED SE-6721	
LED4	L268Y025H01	LED SE-7231	
	L268Y028H01	LED DISPLAY	
IC1	L262C029H01	IC, LA1222	
IC2	L262C016H01	IC, LA1235	
IC3	L262C023H01	IC, TD6104P	
IC4	L262C019H01	IC, LB1450	
IC5	L262C017H01	IC, LA1240	
IC6	L262C018H01	IC, LA3390	
IC7	L262C022H01	IC, TC9137BP	
IC9	L262C020H01	IC, NJM2043 (D)	
IC10	"	" "	
IC11	L262C020H01	" "	
IC601	L262C024H01	IC, TD6301AP	
IC801	L262C025H01	IC, NJM78M05	
IC802	L262C026H01	IC, NJM78M15	
IFT1	L364Y001H01	IFT FM	
IFT2	L374Y002H01	IFT AM	
IFT3	L374Y003H01	IFT AM	
L1	L361/024H01	COI-FM ANT	
L1	L361y024H01	" "	A
L1	"	" "	A
L1	"	" "	B
L1	"	" "	C
L1	"	" "	B
L1	"	" "	C
L1	"	" "	C

SYMBOL NO.	PART NO.	DESCRIPTION	REF
L2	L370Y030H01	COI-FM ANT	
L3	L361Y022H01	COIL-AM OSC	
LPF1	L351Y003H01	FILTER, LOW PASS	
LPF2	"	"	
LPF3	U351C046H01	FILTER	C1
PT1	L350Y028H01	TRANS-POWER	A1
PT1	L350Y035H01	"	A
PT1	L350Y030H01	"	B
PT1	L350Y029H01	"	C1
PT1	L350Y029H01	"	B1
PT1	L350Y030H01	"	C3
PT1	L350Y036H01	"	C2
PT1	L350Y029H01	"	
SW	L432Y043H01	POWER SW	A1
SW	L432Y043H01	"	A
SW	L432Y044H01	"	B
SW	L432Y044H01	"	C1
SW	L432Y044H01	"	B1
SW	L432Y044H01	"	C3
SW	L432Y043H01	"	C2
SW	L432Y044H01	"	
FEI	L929Y001H01	FRONT END	A1
FEI	L929Y001H01	"	A
FEI	L929Y001H01	"	B
FEI	L929Y502H01	"	C1
FEI	L929Y001H01	"	C
FEI	L929Y001H01	"	B1
FEI	L929Y001H01	"	C3
FEI	L929Y002H01	"	C2
	L230Y002H01	CONNECTOR	
	U452S024H45	"	
	"	"	
	U452S024H51	"	
	U452S024H43	"	
	U452S024H42	"	
	U452S024H42	"	
CF1	L365Y002H01	FILTER, CERAMIC FM 10,7Mc	
CF2	"	"	
CF3	"	"	
CF4	L365Y001H01	FILTER CERAMIC AM SF2450B	
CR1	L285Y001H01	CRYSTAL 7.2MHz	
VC1	U202S002H04	VC-TRIM 30N750 GREEN	
VC2	"	"	
VC3	"	"	
VCP1	U264Y014H01	KV12362	
VCP2	"	"	
VR1	L127Y003H07	VR SEMI B10K	
VR2	L127Y003H12	VR SEMI B50K	
VR3	L127Y003H07	VR SEMI B10K	
VR4	L127Y003H02	VR SEMI B1K	
VR5	L127Y003H13	VR SEMI B100K	A1
VR5	L127Y003H13	"	A
VR5	L127Y003H13	"	B
VR5	L127Y003H07	"	C1
VR5	L127Y003H13	"	C
VR5	L127Y003H13	"	B1

SYMBOL NO.	PART NO.	DESCRIPTION	REF
VR5	L127Y003H13	VR SEMI B100K	C3
VR5	L127Y003H13	"	C2
VR6	L127Y003H12	VR SEMI B50K	
SW	L432Y030H01	SW PUSH SEARCH	
SW	L432Y032H01	SW PUSH AM/FM	
SW	L432Y042H02	SW PUSH BLEND/MONO	
SW	L432S066H01	SW PUSH UP/DOWN	
SW	U432S066H01	SW PUSH	
J	L440Y005H01	JACK RCA	
PT1-PT11	U685S223H01	PIN	
	U565D381H02	RADIATOR	
	L440Y007H01,	ANT TERMINAL	

Item	Parts No.	Name		Q'ty
01	L580B004H01	Cabint Bottom		1
02	L561B006H01	Cabint Top		1
03	L702A015H01	Panel Front		1
04	L703B020H01	Cover Back	A1	1
04	L703B020H02	"	A	1
04	L703B020H03	"	B	1
04	L703B020H04	"	C1	1
04	L703B020H05	"	C	1
04	L703B020H06	"	B1	1
04	L703B020H07	"	C3	1
04	L703B020H08	"	C2	1
05	L547B008H01	Frame (R)		1
06	L547B007H01	Frame (L)		1
07	L547C002H01	Frame Center		1
08	L704D066H01	Knob Search		1
09	L704D060H01	Knob Tuning		1
10	L704D059H01	Knob AM/FM		1
11	L704D059H02	Knob Enter		1
12	L704D061H01	Knob Push		2
13	L704D061H02	Knob Power		1
14	L703D022H01	Lens		1
15	L541D083H01	Holder LED		1
16	L704D063H01	Chassis Knob		1
17	L546D053H01	Holder		1
18	L525D004H01	Level Push		2
19	L241A030H03	PCB Ass'y up/down		1
20	L241C021G01	PCB Ass'y Display		1
21	L241A030H02	PCB Ass'y SW		1
22	L241B074G01	PCB Ass'y Tuner		1
23	L440Y007H01	Ant Terminal		1
24	L350Y044H01	Trans Power		1
25	L771D006H01	Foot Rubber		4
26	L370Y030H01	Coil AM Ant		1
27	L452D001H01	Connector FM Ant		1
28	L540D051H01	Clamper		2
29	L242Y501H01	Power Cord	A1	1
29	L242Y501H01	"	A	1
29	L242Y501H06	"	B	1
29	L242Y501H18	"	C1	1
29	L242Y501H18	"	C	1
29	L242Y501H01	"	B1	1
29	L242Y501H01	"	C3	1
29	L242Y501H18	"	C2	1
30	U656S164H24	T-Screw 1-3x8		7
31	U656S263H22	T-Screw 2-3x5		2
32	L650D005H02	B-Screw M4x5		4
33	U656S164H24	T-Screw 1-3x8		6
34	U650S025H31	P-Screw M4x10		4
35	U656S164H24	T-Screw 1-3x8		6
36	U656S263H23	T-Screw 2-3x6		6
37	U656S164H24	T-Screw 1-3x8		8
38	U656S164H24	T-Screw 1-3x8		4
39	U650S063H19	B-Screw M3x6		1
40	U656S164H24	T-Screw 1-3x8		2
41	U680S322H03	Washer Toothed 3		2

EXPLODED VIEW

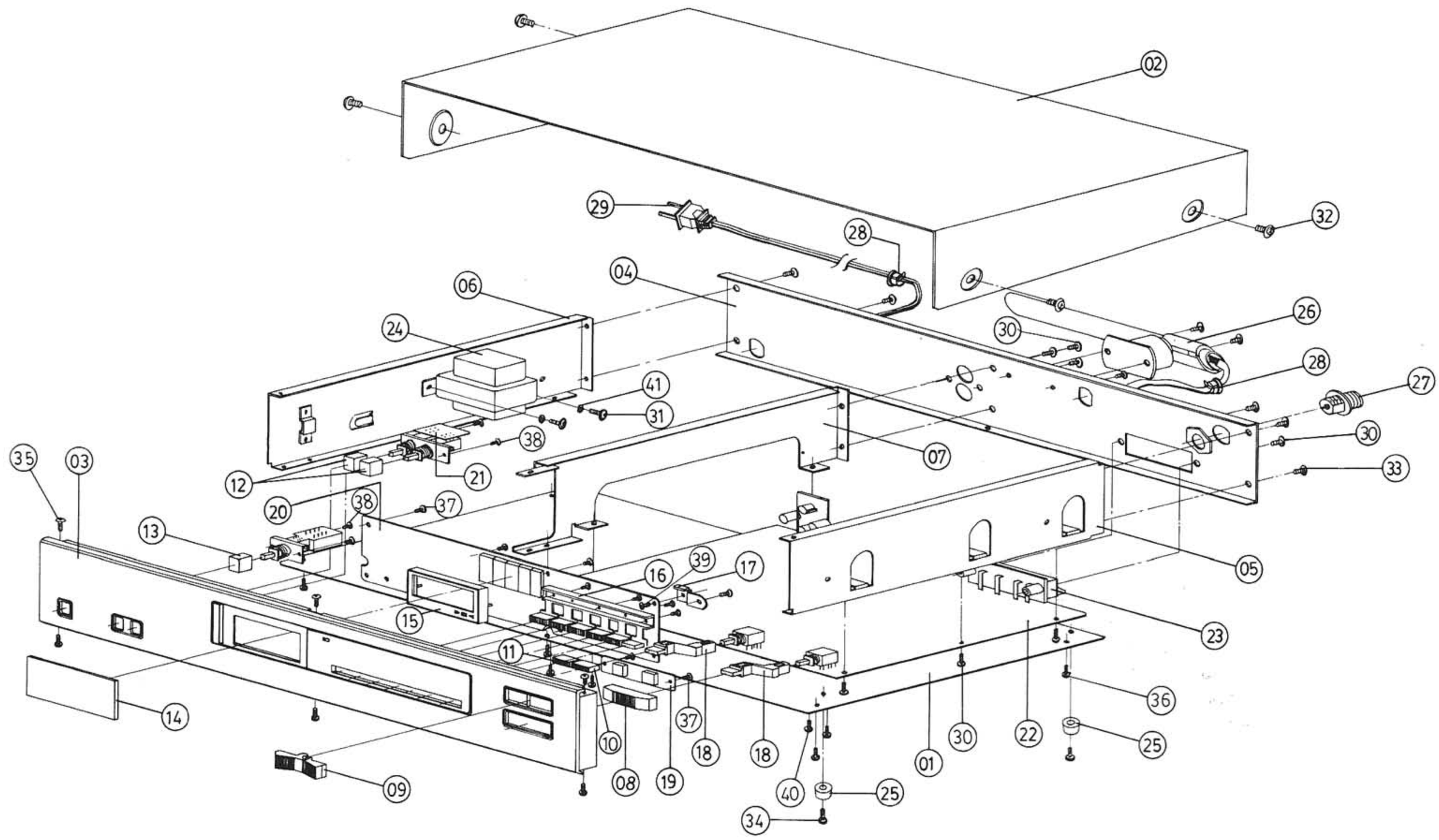

NAD ELECTRONICS, INC.

International Service Center
675 Canton Street
Norwood, Massachusetts 02062
Telephone: (617) 769-7050
Facsimile: (617) 762-3555
Telex: 6817093 NAD USA INC

SERVICE BULLETIN NO. 8602 JUNE 6, 1986

4130 LOSS OF AUDIO WHEN HOT

DESCRIPTION: Occasionally, you may receive a complaint of loss of audio at high operating temperature (tuner works correctly when cold, but sound disappears after warmup.)

This may be caused by slightly low output of regulator IC802, which, in conjunction with normal thermal drift of zener D806, results in false activation of the turn on/off muting circuit (illustrated below).

REMEDY: It is preferable to modify the tuner according to Method A. If you cannot obtain a 24V zener, it is acceptable to modify the 4130 according to Method B.

Method A: Change 27V zener D806 to 24V type, by adding the new diode in parallel with the original, on the print circuit (foil) side of the PCB.

Method B: Increase B+ slightly, by cutting the ground foil to regulator IC802, and installing a diode across the cut. Use BAW-62, 1N4148, or equivalent. Install the diode with its cathode stripe away from the IC.

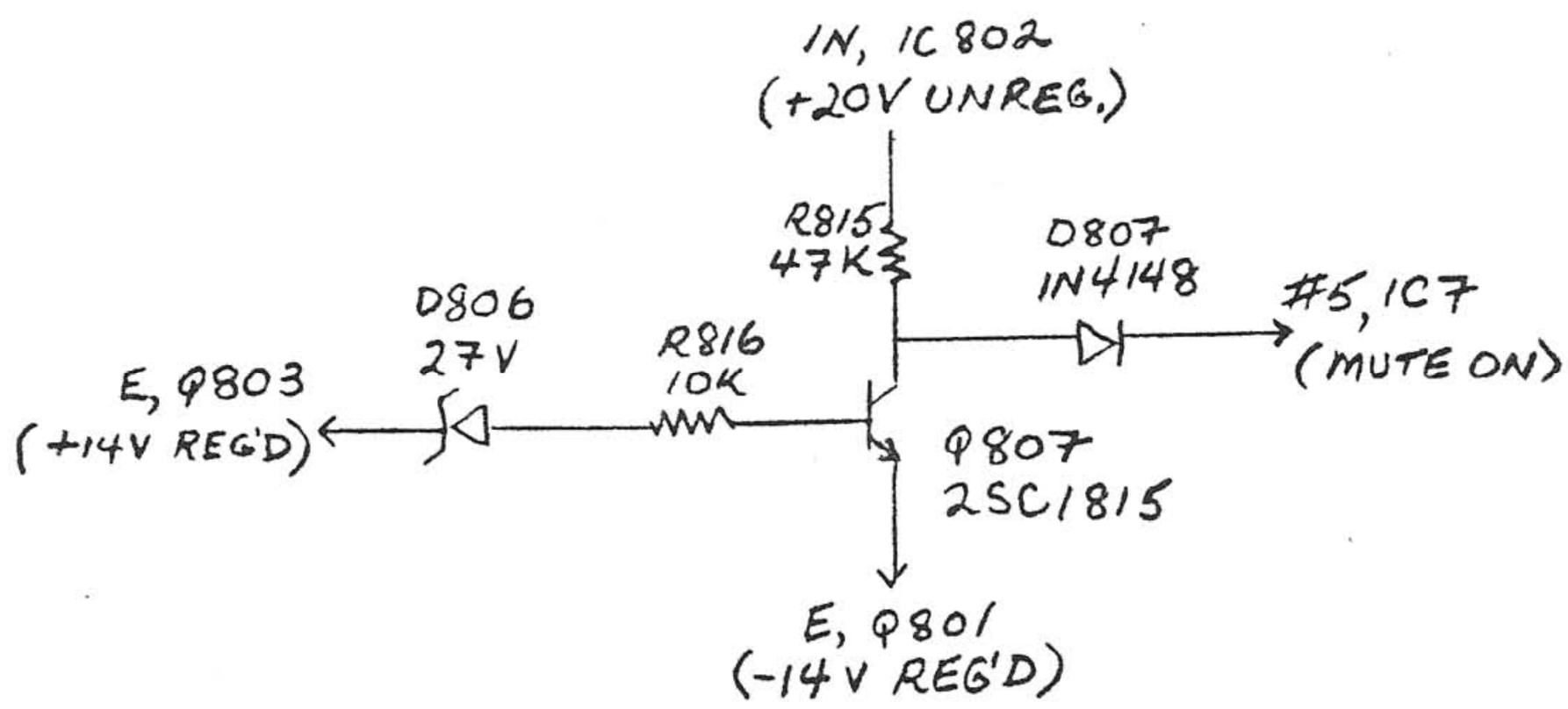

D806 will be changed in production to a 24V zener, commencing with S/N D413011280.

SERVICE MANUAL

4130

AM/FM STEREO TUNER

NAD ELECTRONICS

BOSTON LONDON TOKYO